

1kW 12V PSU transformer spec

Rossi Alex

restricted

EMI EMC

› Core size: **Toroid 26/15/10**

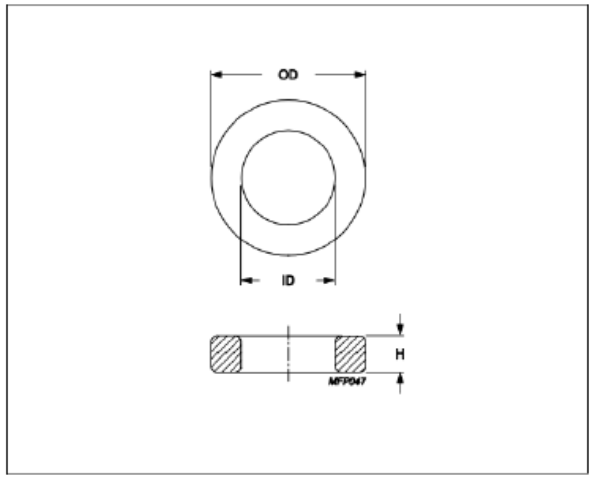

Effective parameters			
	Parameter	**Value**	**Unit**
Σ(I/A)	*core factor (C1)*	1.08	mm^{-1}
Ve	*effective volume*	3360	mm^3
Le	*effective length*	60.1	mm
Ae	*effective area*	55.9	mm^2
m	*mass of core*	≈ 17	g/pcs

Epoxy coating DC isolation voltage 2000.

Maximum operating temperature of the coating is 200ºC.

Dimensions (mm)				
Cores	**OD**	**ID**	**H**	
TX26/15/10	26.95 max	13.65 min	10.9 max	Epoxy Coated

› Core material: **3E12**

Core data				
Cores	**Material**	**Al (nH/turns²)**	**Al tolerance**	**μe**
TX26/15/10	3C94	2530	± 25%	≈ 2300
TX26/15/10	3E10	11000	± 20%	≈ 10000
TX26/15/10	3E12	13200	± 30%	≈ 12000
TX26/15/10	3E26 (3E27-M7)	7710	± 25%	≈ 7000
TX26/15/10	3E27	6060	± 25%	≈ 5500
TX26/15/10	3E6 (3E10-M)	11000	± 30%	≈ 10000
TX26/15/10	3E65	5730	± 25%	≈ 5200

› Number of turns: N1 = N2 = 13

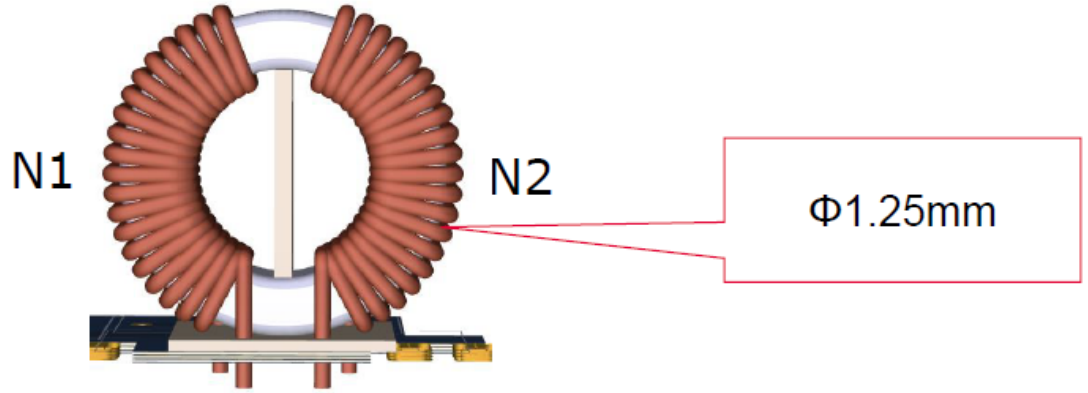

› Footprint

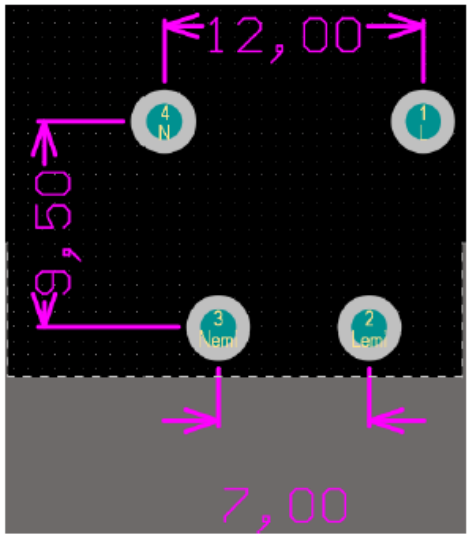

Copyright © Infineon Technologies AG 2023. All rights reserved.

Core full spec 1/2

Product Specifications	FERROXCUBE

Core type:	EQ38/8/25		
		Selling unit:	PCS

Product dimensions (mm): EQ38/8/25					
	Nom	Tol +	Tol -	Max	Min
A	38.10	0.70	0.70	38.80	37.40
B	25.40	0.50	0.50	25.90	24.90
C	24.76	0.50	0.50	25.26	24.26
D2	33.10	0.60	0.60	33.70	32.50
D3	14.00	0.20	0.20	14.20	13.80
E	8.00	0.15	0.15	8.15	7.85
F	5.30	0.20	0.20	5.50	5.10

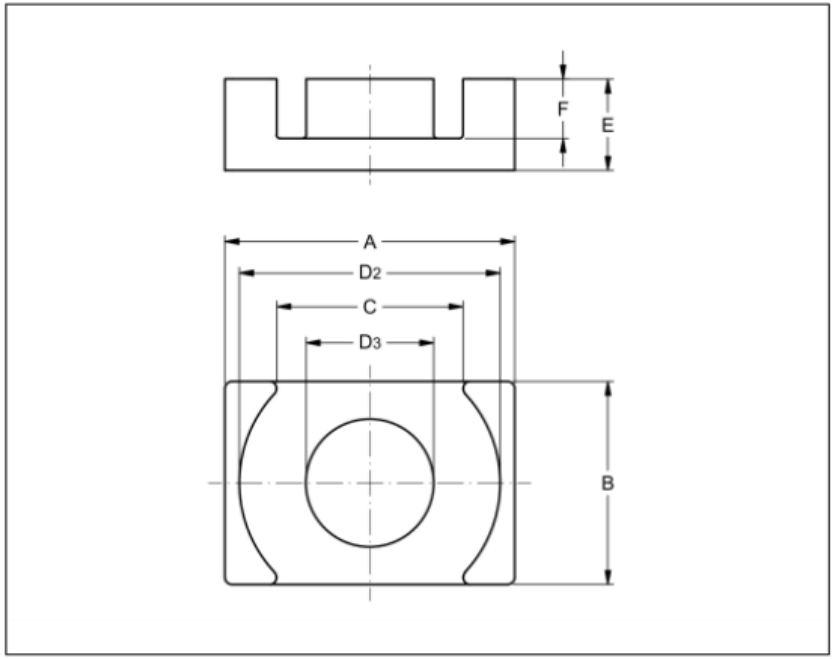

Copyright © Infineon Technologies AG 2023. All rights reserved.

Core full spec 2/2

Effective parameters				
Effective area	**Minimum area**	**Effective length**	**Effective volume**	**Core factor**
Ae = 152 [mm²]	Amin = 119 [mm²]	Le = 51.9 [mm]	Ve = 7900 [mm³]	C1 = 0.341 [mm⁻¹]

Inductance factor							
Material	**Value**	**Tol +**	**Tol -**	**Measuring conditions**			**Unit**
3C95	8810	25%	25%	10 kHz	< 0.1 mT	25°C	nH/turns²
3C96	6300	25%	25%	10 kHz	< 0.1 mT	25°C	nH/turns²
3F36	4100	25%	25%	10 kHz	< 0.1 mT	25°C	nH/turns²
3F4	3000	25%	25%	10 kHz	< 0.1 mT	25°C	nH/turns²

Power loss						
Material	**Symbol**	**Value**	**Measuring conditions**			**Unit**
3C95	Pv	< 3.8	100 kHz	200 mT	100°C	W/set
3C95	Pv	< 4.1	100 kHz	200 mT	25°C	W/set
3C96	Pv	< 3.6	100 kHz	200 mT	100°C	W/set
3C96	Pv	< 1.5	400 kHz	50 mT	100°C	W/set
3F36	Pv	< 1.2	500 kHz	50 mT	100°C	W/set
3F36	Pv	< 9.1	500 kHz	100 mT	100°C	W/set
3F4	Pv	< 2.4	1000 kHz	30 mT	100°C	W/set
3F4	Pv	< 3.9	3000 kHz	10 mT	100°C	W/set

Bsat						
Material	**Symbol**	**Value**	**Measuring conditions**			**Unit**
3C95	Bsat	> 330	10 kHz	250 A/m	100°C	mT

Copyright © Infineon Technologies AG 2023. All rights reserved.

Transformer construction 1/2

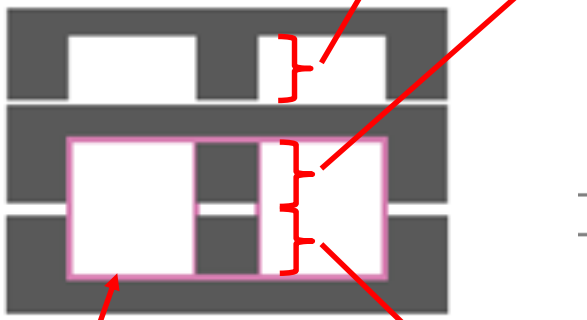

Inner and external covered with Kapton

	Litz wire		9 turns
	Gap Filler		1
	Distributed Gap		0.5
	Kapton		0.05
	Sec_1		0.32
	Kapton		0.05
	Sec_2		0.32
	Primary		1.35
	Sec_1		0.32
5.1	Kapton		0.05
	Sec_2		0.32
	Primary		1.35
	Sec_1		0.32
	Kapton		0.05
	Sec_2		0.32
	Gap filler		0.28
	Distributed Gap		0.2
	Gap filler		0.28
	Sec_1		0.32
	Kapton		0.05
	Sec_2		0.32
	Primary		1.35
	Sec_1		0.32
5.1	Kapton		0.05
	Sec_2		0.32
	Primary		1.35
	Sec_1		0.32
	Kapton		0.05
	Sec_2		0.32
	Kapton		0.05

Litz wire	
Kaptop	
PCB	
Gap filler	
Distributed Gap	

Copyright © Infineon Technologies AG 2023. All rights reserved.

Transformer construction 2/2 (*please refer to the technical drawing)

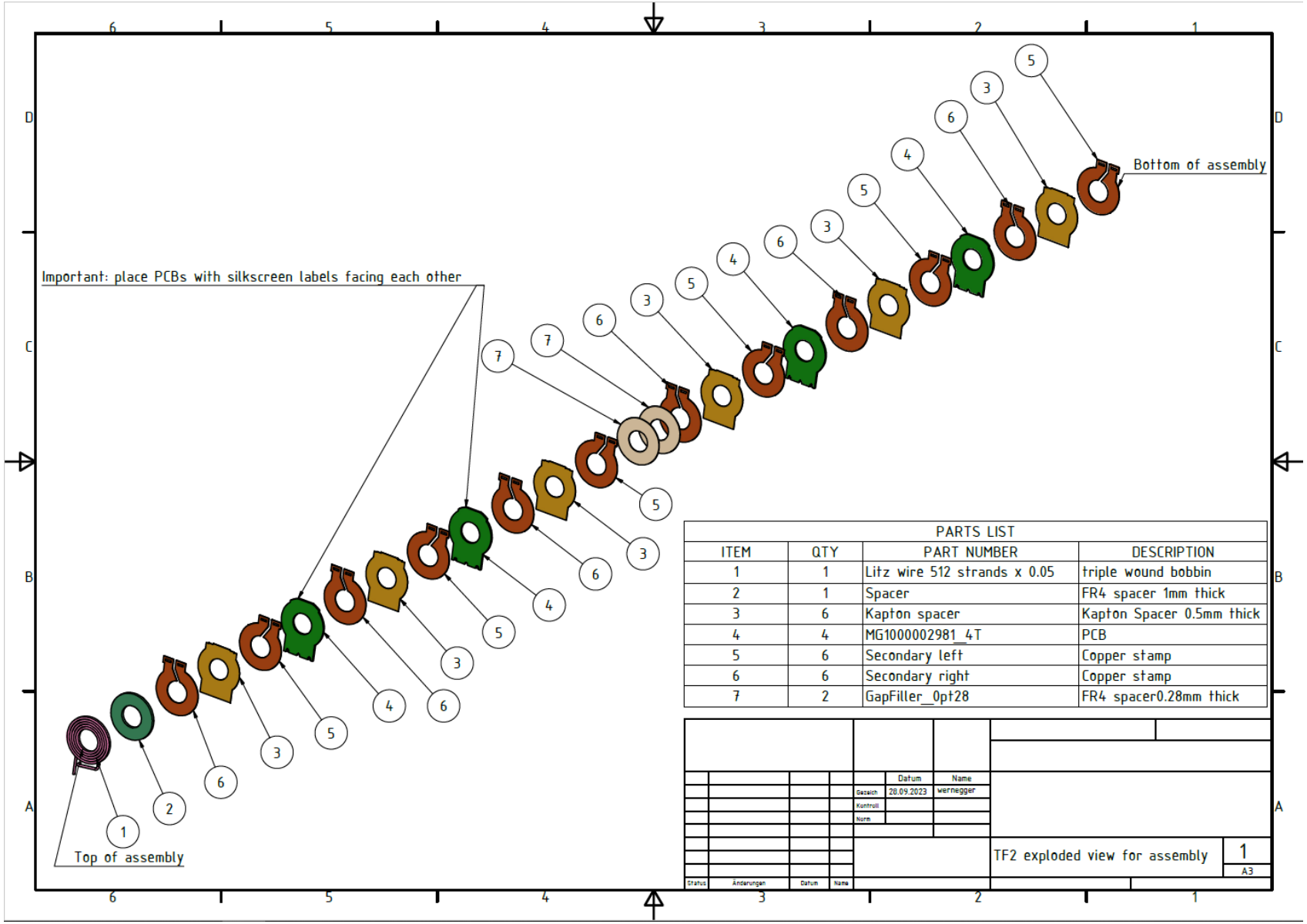

PARTS LIST			
ITEM	QTY	PART NUMBER	DESCRIPTION
1	1	Litz wire 512 strands x 0.05	triple wound bobbin
2	1	Spacer	FR4 spacer 1mm thick
3	6	Kapton spacer	Kapton Spacer 0.5mm thick
4	4	MG1000002981_4T	PCB
5	6	Secondary left	Copper stamp
6	6	Secondary right	Copper stamp
7	2	GapFiller_0pt28	FR4 spacer0.28mm thick

	Datum	Name
Gezeich	28.09.2023	wernegger
Kontroll		
Norm		

TF2 exploded view for assembly — 1 — A3

Copyright © Infineon Technologies AG 2023. All rights reserved.

Final transformer 3D view & final assembling 1/2

Resonant inductor:
- Value 15µH±10%
- 9 turns of litz wire
(512x0.05 triple isolation)

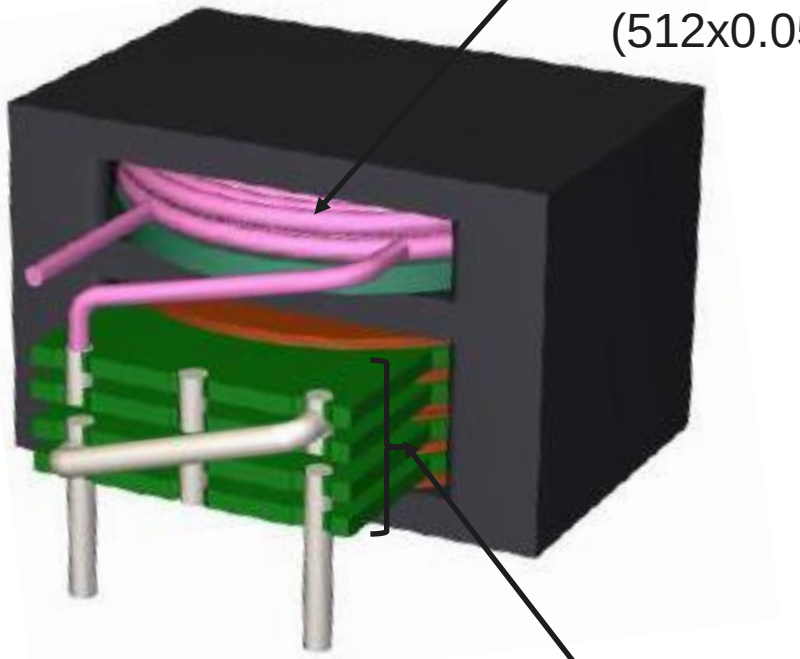

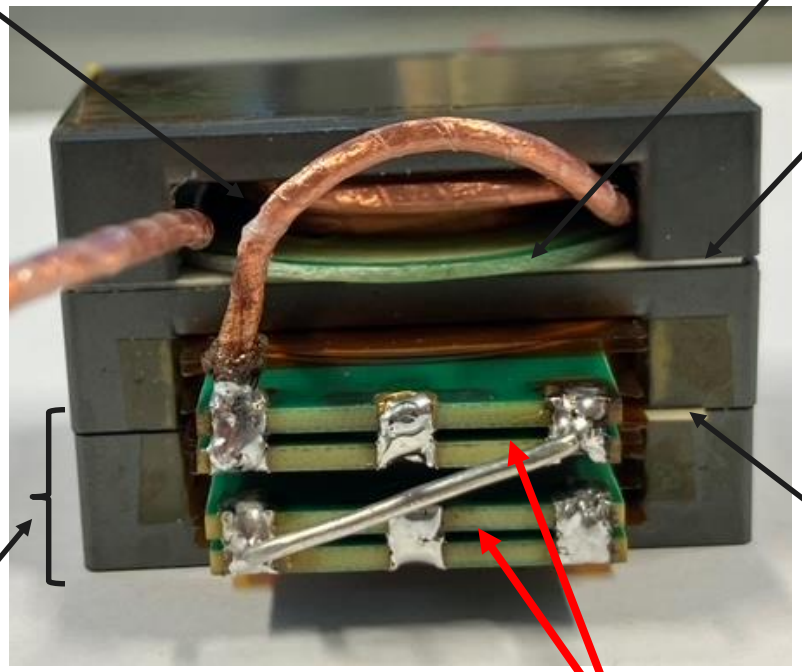

FR4 spacer: 1mm

Distributed gap: 0.5 mm

Distributed gap: 0.2 mm

Primary pcb:
- Value 150µH±10%
- 4 x MG100002981_4T

*Primary PCBs silkscreen labels are facing each other (see technical drawings)

Copyright © Infineon Technologies AG 2023. All rights reserved.

Final transformer 3D view & final assembling 2/2

*Secondary copper plates start from the right
(see technical drawing)

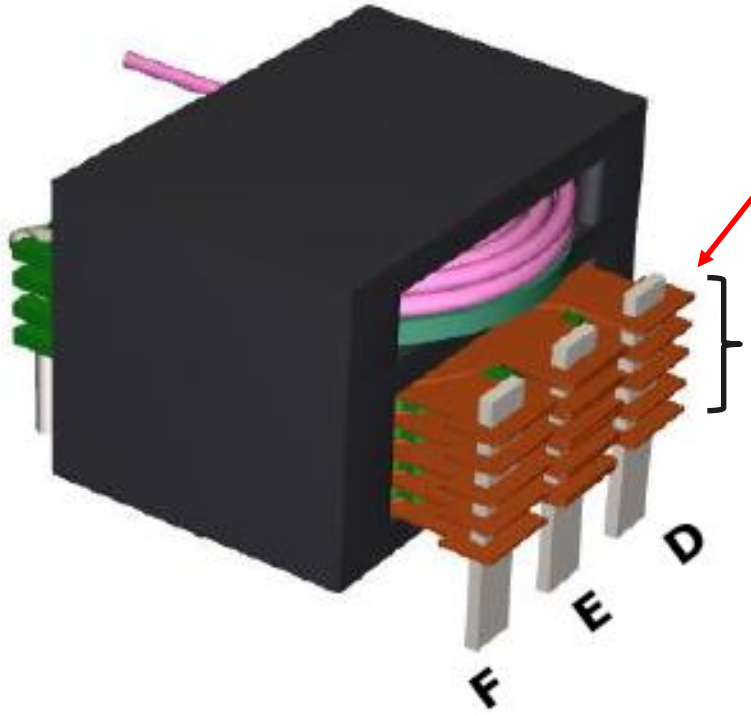

Secondary copper plate:
- 12 x copper plates

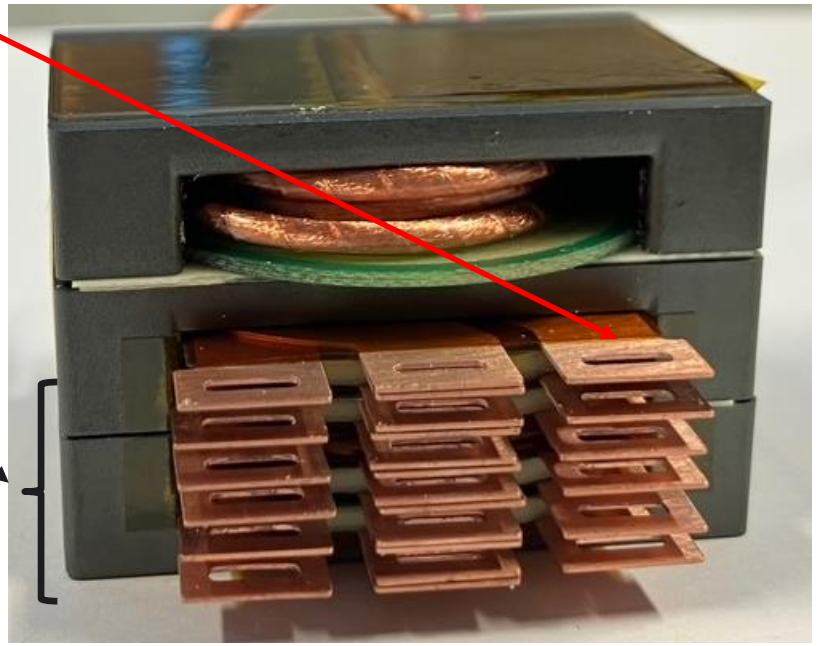

Copyright © Infineon Technologies AG 2023. All rights reserved.


Infineon